Test Report issued under the responsibility of

TEST REPORT Technical Requirements by Ministerial Odinance of MITI (1962:No.85) 1st clause: Appendix 9, Lithium ion Secondary batteries	
Report Reference No. ..... :	17PNS10026 01001
Date of issue ..... :	November 21, 2017
Total number of pages ..... :	16
Testing Laboratory ..... :	**Guangdong UTL Co., Ltd.**
Address ..... :	Lianding Testing Building, No.18 Center Road of Yayuan Industrial Zone, Nancheng Disctrict, Dongguan, Guangdong, China
Tested by (name + signature)..... :	Hugo Liu .....
Checked by (name + signature)..... :	Sophie Wu .....
Approved by (name + signature)..... :	Andy Huang .....
Applicant's name ..... :	SHENZHEN A&S POWER TECHNOLOGY CO LTD
Address ..... :	Rm1312, A Block, Weidonglong Business Building, NO.194 MeilongRd, Longhua, Shenzhen, China.
Manufacturer's name ..... :	Dongguan Golden CEL Battery Co., Limited
Address ..... :	No.11, Yinhu Industrial Park, JiaoYiTang Management Zone, TangXia, DongGuan, China.
Factory's name ..... :	Dongguan Golden CEL Battery Co., Limited
Address ..... :	No.11, Yinhu Industrial Park, JiaoYiTang Management Zone, TangXia, DongGuan, China.
Test specification	
Standard ..... :	Technical Requirements by Ministerial Ordinance of MITI (1962:No.85) 1st Clause: Appendix 9, Lithium ion secondary batteries
Test procedure ..... :	N/A.
Procedure deviation..... :	N/A.
Non-standard test method..... :	N/A.
Test item	
Description..... :	Lithium Ion Cylindrical Battery
Trademark ..... :	N/A
Model and/or type reference ..... :	AS18650 3.7V 2600mAh
Rating(s)..... :	3.7V, 2600mAh, 9.62Wh

List of Attachments (including a total number of pages in each attachment):

- Photos documentation (3 pages)

Test case verdicts

Test case does not apply to the test object.....:	N/A
Test item does meet the requirement.....:	P(ass)
Test item does not meet the requirement.....:	F(ail)

Testing

Date of receipt of test item .....:	2017-10-20
Date(s) of performance of test.....:	2017-10-20 ~ 2017-11-20

General remarks

This report shall not be reproduced except in full without the written approval of the testing laboratory.

The test results presented in this report relate only to the item tested.

”(see remark #)” refers to a remark appended to the report.

Copy of marking plate:

The artwork below may be only a draft. The use of certification marks on a product must be authorized by the respective NCBs that own these marks.

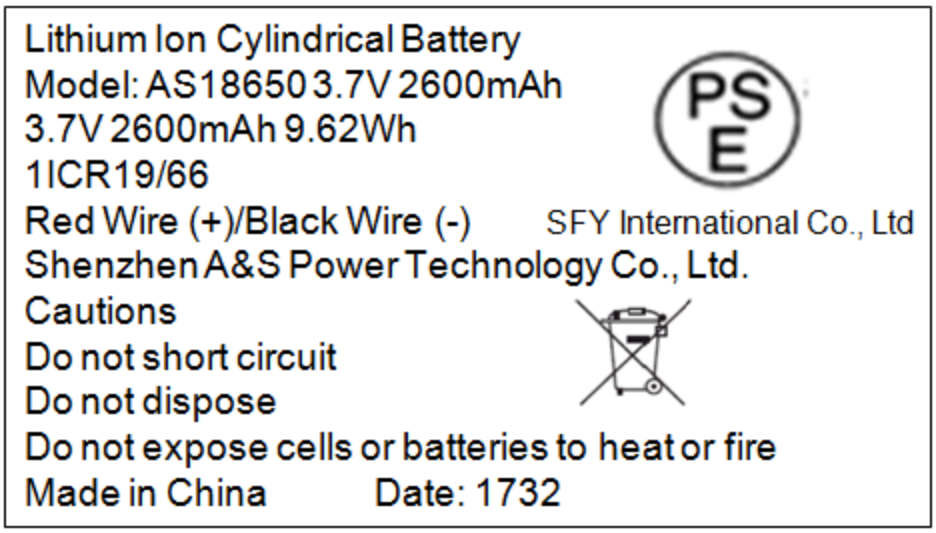

Date Code: YYWW
Where, YY for Year, MM for Week.

General product information:

This battery is constructed with single Lithium Ion cell. and has overcharge, over-discharge, over current and short-circuits proof circuit.

Weight: Approx. 25.37kg

The main features of the model are shown as below:

Model	Nominal capacity	Nominal voltage	Nominal Charge Current	Nominal Discharge Current	Maximum Charge Current	Maximum Discharge Current	Maximum Charge Voltage	Cut-off Voltage
AS18650 3.7V 2600mAh	2600mAh	3.7V	1250mA	1250mA	2500mA	2500mA	4.23V	3.0V

Model	Upper limit charge voltage	Taper-off current	Lower charge temperature	Upper charge temperature
AS18650 3.7V 2600mAh	4.25V	130mA	0°C	45°C

The main features of the cell within the battery pack shown as below:

Model	Nominal capacity	Nominal voltage	Nominal Charge Current	Nominal Discharge Current	Maximum Charge Current	Maximum Discharge Current	Maximum Charge Voltage	Cut-off Voltage
INR 18650E 26	2600mAh	3.7V	1250mA	1250mA	2500mA	2500mA	4.23V	3.0V

Model	Upper limit charge voltage	Taper-off current	Lower charge temperature	Upper charge temperature
INR 18650E 26	4.25V	130mA	0°C	45°C

<u>Construction:</u>

Cell dimension: Max. 18.3mm (D) x Max. 65.5mm (H)

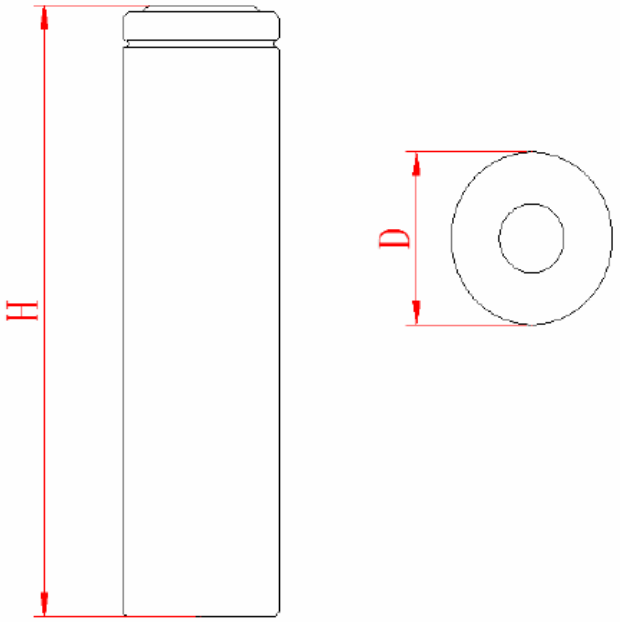

Battery dimension: Max. 24.0mm (D) x Max. 69.3mm (H)

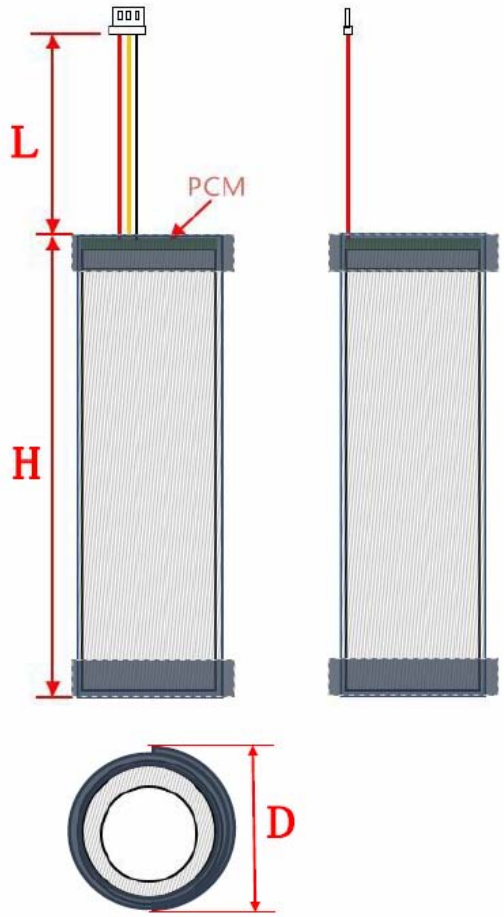

Circuit diagram:

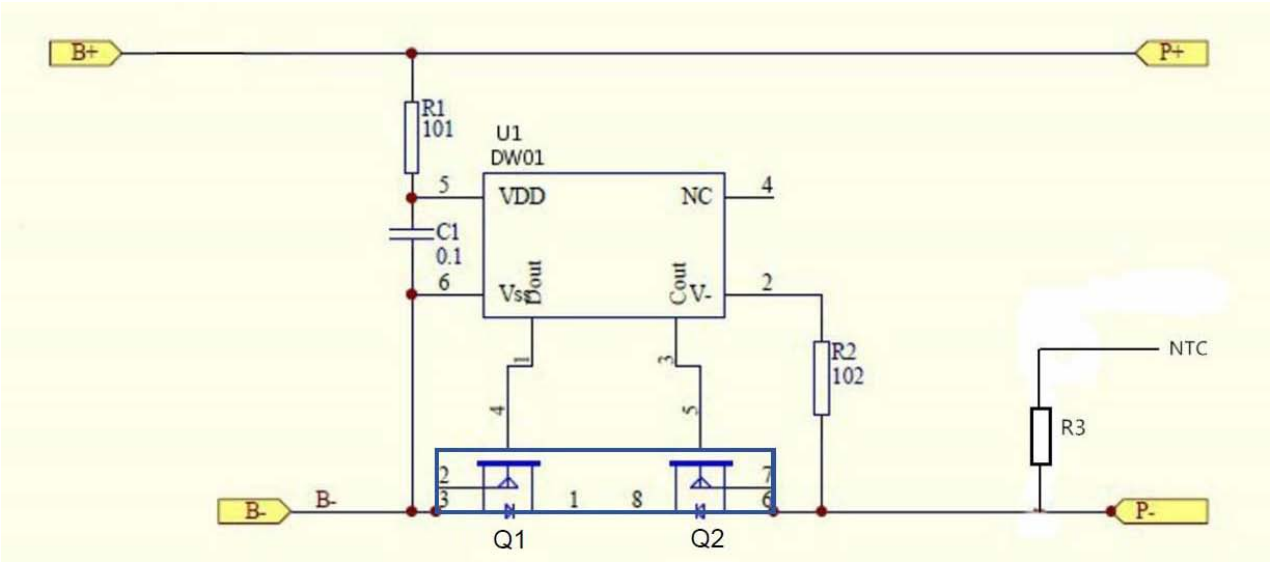

Summary of testing:

The battery is evaluated and tested in this test report according to DENAN appendix 9.
The cell is also evaluated and tested in this test report according to DENAN appendix 9.

MITI (1962:No.85) 1st clause: Appendix 9			
Clause	Requirement + Test	Result - Remark	Verdict
1.	Basic Design		P
1.(1)	Insulation and Wiring		P
	a) Insulation Resistance between an accessible metal case (excluding electrical contacts) and positive terminals ≥5MΩ .	No metal case exists.	N/A
	b) Internal wiring and insulation are sufficient to withstand maximum anticipated current, voltage and temperature requirements	See tests of clause 2 and clause 3.	P
	c) Orientation of wiring maintains adequate creepage and clearance distances between conductors. Mechanical integrity of internal connections are sufficient to accommodate conditions of reasonably foreseeable misuse.	See tests of clause 2 and clause 3.	P
1.(2)	Inner Pressure Reduction Mechanism		P
	a) Battery cases and cells incorporate a pressure relief mechanism or are constructed so that they relieve excessive internal pressure at a value and rate that will preclude rupture, explosion and self-ignition.	See tests of clause 2 and clause 3.	P
	b) Encapsulant used to support cells within an outer casing does not cause the battery to overheat during normal operation no inhibit pressure relief.	See tests of clause 2 and clause 3.	P
1.(3)	Temperature and current management		P
	The batteries are designed such that abnormal temperature rise conditions are prevented.	over current and short-circuit proof circuit used in this battery. See tests of clause 3.	P
	Means is provided to limit current to safe levels during charge and discharge.	over current and short-circuit proof circuit used in this battery. See tests of clause 3.	P
1.(4)	Terminal contacts		P
	a) Terminals have a clear polarity marking on the external surface of the battery or be designed with no fear of misconnection.	DC connector used.	P
	b) The size and shape of the terminal contacts ensure that they can carry the maximum anticipated current.	DC connector complied with the requirements.	P
	c) External terminal contact surfaces are formed from conductive materials with good mechanical strength and corrosion resistance.		P

MITI (1962:No.85) 1st clause: Appendix 9			
Clause	Requirement + Test	Result - Remark	Verdict
	Terminal contacts are arranged to minimize the risk of short circuits.		P
1.(5)	Assembly of cells into batteries		P
	Cells used in the battery assembly have closely matched capacities, are of the same design, and are of the same chemistry and same manufacturer.	Single cell battery.	N/A
	The battery incorporates separate circuitry to prevent cell reversal from uneven charges as the pack is designed for the selective discharge of a portion of its series connected cells.	No such design	N/A
2.	Intended Use		P
2.(1)	Continuous Low Rate Charge		P
	Fully charged cells are subjected for 28 days to a charge as specified by the manufacturer.	Arrange the test as required.	P
	Ambient temperature when testing	45°C	P
	Results: no fire, no explosion, no leakage	No fire, no explosion, no leakage.	P
2.(2)	Vibration		P
	The measured open circuit voltage of the fully charged cells or batteries is within anticipated parameters.	See test below.	P
	The cells or batteries are subjected to a vibration sequence with amplitude of 0.76 mm and a total maximum excursion of 1.52 mm. The frequency was varied at the rate of 1 Hz/min between the limits of 10Hz and 55 Hz. The entire range of frequencies (10 Hz to 55 Hz) and return (55 Hz to 10 Hz) was traversed in 90 min 5 min for each mounting position.	Arrange the test as required.	P
	The vibration was applied in each of three mutually perpendicular directions.	Arrange the test as required.	P
	Results: no fire, no explosion, no leakage	No fire, no explosion, no leakage.	P
2.(3)	Battery enclosure test at high ambient temperature		N/A
	Fully charged batteries were placed in an air-circulating oven at a temperature of 70°C±2°C for 7 hours. Afterwards, they are removed and allowed to return to room temperature.		N/A
	Results: no physical distortion of the battery casing resulting in exposure if internal components.		N/A
2.(4)	Temperature cycling		P

MITI (1962:No.85) 1st clause: Appendix 9			
Clause	Requirement + Test	Result - Remark	Verdict
	Fully charged cells or batteries were subjected to temperature cycling (+75°C, +20°C, -20°C, +20°C) in forced draught chambers according to the procedure.	Arrange the test as required.	P
	After the fifth cycle, the cells or batteries were stored at 20°C±5°C for 7 days prior to examination.	Arrange the test as required.	P
	Results: No fire, no explosion, no leakage	No fire, no explosion, no leakage.	P
3	Reasonably foreseeable misuse		P
3.(1)	External short circuit		P
	a) Fully charged cells were subjected to a short circuit test at 55°C±5°C.	Arrange the test as required. Each 5pcs cells charged at ambient temperature 45°C and -5°C respectively prepared for the test.	P
	The external resistance did not exceed 80±20 mΩ.	Total external resistance: 70 mΩ.	P
	The cells were tested for 24 h or until the case temperature declined by 20% of the maximum temperature rise.	Tested until the case temperature declined by 20% of the maximum temperature rise.	P
	b) Fully charged batteries were subjected to a short circuit test at 20°C±5°C.	Arrange the test as required. Each 5pcs batteries charged at ambient temperature 45°C and -5°C respectively prepared for the test.	P
	The external resistance did not exceed 80±20 mΩ.	Total external resistance: 70mΩ.	P
	The batteries were tested for 24 h or until the case temperature declined by 20% of the maximum temperature rise.	Tested for 24 hours.	P
	If battery incorporates protective device or protective circuit and the current has stopped, then for one hour after the current stopped.		P
	Results: no fire, no explosion.	No fire, no explosion.	P
3.(2)	Free fall		P
	Fully charged cells or batteries were dropped 3 times from a height of 1.0 m onto a concrete floor.	Arrange the test as required.	P
	Provided that this does not apply to charged batteries weighting more than 7 kg.		P
	Results: no fire, no explosion	No fire, no explosion.	P
3.(3)	Mechanical shock (crash hazard)		P

MITI (1962:No.85) 1st clause: Appendix 9			
Clause	Requirement + Test	Result - Remark	Verdict
	a) Fully charged cells or batteries were subjected to a total of three shocks of equal magnitude applied in each of three mutually perpendicular directions.	Arrange the test as required.	P
	b) During the initial 3 milliseconds, the minimum average acceleration was 735 m/s^2. The peak acceleration was between 1228 m/s^2 and 1716 m/s^2.		P
	Results: no fire, no explosion, no leakage	No fire, no explosion, no leakage.	P
3.(4)	Thermal abuse		P
	Fully charged cells were placed in a gravity or circulating air-convention oven. The oven temperature was raised at a rate of 5 °C/min ± 2 °C /min to a temperature of 130°C ± 2°C. The cell remained at that temperature for 10 minutes before the test was discontinued.	Arrange the test as required. Each 5pcs cells charged at ambient temperature 45°C and -5°C respectively prepared for the test.	P
	Results: no fire, no explosion	No fire, no explosion.	P
3.(5)	Crushing of cells		P
	a) Fully charged cells were crushed between two flat surfaces with a hydraulic ram exerting a force of 13 kN ±1 kN.	Arrange the test as required. Each 5pcs cells charged at ambient temperature 45°C and -5°C respectively prepared for the test.	P
	b) The force was released when		P
	(1) the maximum forces applied	The max. force is achieved when the force applied crushing the cell.	P
	(2) an abrupt voltage drop of one-third of the original voltage has been obtained		N/A
	(3) There was 10% deformation of battery height		N/A
	c) A cylindrical or prismatic cell was crushed with its longitudinal axis parallel to the flat surfaces of the crushing apparatus.	Prismatic cell	P
	A second set of prismatic cells was tested, rotated 90 degrees around their longitudinal axis compared to the first set.		P
	Ambient temperature when testing	Ambient temperature 45°C and -5°C respectively.	P
	Results: no fire, no explosion.	No fire, no explosion.	P

MITI (1962:No.85) 1st clause: Appendix 9			
Clause	Requirement + Test	Result - Remark	Verdict
3.(6)	Low pressure	Arrange the test as required.	P
	Fully charged cells are placed in a vacuum chamber whose internal pressure was gradually reduced to a pressure equal to or less than 11.6 kPa and held at that value for 6 hours.		P
	Results: no fire, no explosion, no leakage	No fire, no explosion, no leakage.	P
3.(7)	Overcharge		P
	A discharged cell was charged from a power supply of 10 V, at a charging current Irec recommended by the manufacturer for 2.5 C5/Irec hours or until it reach the test voltage.	Arrange the test as required. Each 5pcs cells overcharged at ambient temperature 45°C and -5°C respectively during the test.	P
	Ambient temperature when testing	Ambient temperature 45°C and -5°C respectively.	P
	Results: no fire, no explosion.	No fire, no explosion.	P
3.(8)	Forced discharge		P
	Discharged cells intended for use in multi-cell applications, were subjected to a reverse charge at 1.0 It (A) for 90 minutes.	Arrange the test as required. Each 5pcs cells forced discharged at ambient temperature 45°C and -5°C respectively during the test.	P
	Ambient temperature when testing	Ambient temperature 45°C and -5°C respectively.	P
	Results: no fire, no explosion	No fire, no explosion.	P
3.(9)	Cell protection against a high charging rate		P
	Discharged cells were charged at three times the charging current recommended by the manufacturer until	Arrange the test as required. Each 5pcs cells high charged at ambient temperature 45°C and -5°C respectively during the test.	P
	the cells was fully charged, or		P
	A protective devices in the equipment or battery cut off the charge current before the cell became fully charged.	No protective device exists.	N/A
	Ambient temperature when testing	Ambient temperature 45°C and -5°C respectively.	P
	Results: no fire, no explosion	No fire, no explosion.	P
3.(10)	Forced internal short circuit of cells		P

MITI (1962:No.85) 1st clause: Appendix 9			
Clause	Requirement + Test	Result - Remark	Verdict
	Pressed the winding core of charged cell (except when electrolyte is not liquid) by pressing jig under condition that nickel peace was inserted.	Arrange the test as required. Each 5pcs cells charged at ambient temperature 45°C and -5°C respectively prepared for the test.	P
	Inserted between the positive active material and negative active material	Arrange the test as required.	P
	Inserted between the uncoated current collector of positive electrode and the active material coated negative active electrode	Arrange the test as required.	P
	Test was stopped when voltage drop of over 50 mV was obtained, or		N/A
	Stopped when the pressure reached 800 N (for prismatic cells, 400N).	The force reached 800N.	P
	Ambient temperature when testing	Ambient temperature 45°C and -5°C respectively.	P
	Number of test sample	Each 5pcs cells charged at ambient temperature 45°C and -5°C respectively prepared for the test.	P
	Results: no fire, no explosion	No fire, no explosion.	P
3.(11)	Function of the overvoltage protection of batteries		P
	The cell block in the battery shall not exceed the upper limited charging voltage at 20°C ± 5°C ambient temperature.	Arrange the test as required.	P
	a) For batteries made of a one cell block, the voltage applied to the cell block during charging shall be measured.		P
	b) For batteries consisting of a series of two pieces or more of cell blocks, it shall be charged while measuring the voltage of each cell block and at the same time, one cell block shall forcibly be discharged and the voltages of the other cell blocks shall gradually be measured.		N/A
	c) For batteries consisting of a series of connection of two pieces or more of cell blocks, a voltage exceeding the upper limited charging voltage specified in Annex Table 1-2 shall be applied to the cell block while measuring the voltage of each cell block. When the charging stops, the voltage shall be measured.		N/A
	The battery provides with protective circuits	Complied.	P

MITI (1962:No.85) 1st clause: Appendix 9			
Clause	Requirement + Test	Result - Remark	Verdict
	Appliance in which battery is installed or battery charger provides with protective circuits.	Complied.	P
3.(12)	Free fall of appliance		N/A
	The charged battery shall be installed to be used, and shall be dropped once a concrete floor or iron plate in a direction considered to most likely affect the battery in a negative manner.		N/A
	An equivalent load shall be applied to the battery		N/A
	Kind of equipment		N/A
	Weight of appliance		N/A
	Applicable standard		N/A
	Height in drop testing		N/A
	Results: no short-circuiting		N/A
4	Labeling		P
	Labeling for batteries shall be provided as below on surface where it can easily be seen but not easily faded.	The label of battery meets the requirements.	P
	Rated voltage	See page 2	P
	Rated capacity	See page 2	P

Tables

	TABLE 1: List of Critical Components				P
Object/part No.	Manufacturer/ trademark	Type/ model	Technical data	Standard	Mark(s) of conformity
PCB	Interchangeable	Interchangeable	Min. V-1, min. 105ºC	UL 796	UL approved
Protect IC (U1)	SII	S-8261ABPMD-G3PT2G	V_{CU}= 4.20V±0.025V, V_{DL}= 2.8V±0.05V	--	Tested with appliance
MOSFET (Q1,Q2)	Developer Microelectronics	DP8205A	V_{DS}=20V, V_{GS}=±12V, I_D=5A	--	Tested with appliance
Wire	Interchangeable	Interchangeable	Min. 22AWG, min. 80°C, min. 30V, VW-1	UL 758	UL approved
Cell	DONG GUAN K-TECH NEW ENERGY CO LTD	INR18650E 26	3.7V, 2600mAh	DENAN Technical Standard Appendix 9.	Tested with appliance UL MH49877
Supplementary information:--					

Tables

	TABLE: 2.(1) Continuous Low Rate Charge Test (Cell)				P
Model	Recommended Charging Method, CC, CV, or CC/CV	Recommended Charging Voltage Vc, Vdc	Recommended Charging Current Irec, A	OCV at Start of Test, Vdc	Results
INR18650E 26	CC and CV	4.20	1.25	4.18	P
INR18650E 26	CC and CV	4.20	1.25	4.18	P
INR18650E 26	CC and CV	4.20	1.25	4.18	P
INR18650E 26	CC and CV	4.20	1.25	4.19	P
INR18650E 26	CC and CV	4.20	1.25	4.19	P
Supplementary information: no fire, explosion or leakage observed					

	TABLE: 2.(2) – Vibration Test (Cell)		P
Model	OCV at Start of Test, Vdc	Results	
INR18650E 26	4.18	P	
INR18650E 26	4.18	P	
INR18650E 26	4.19	P	
INR18650E 26	4.19	P	
INR18650E 26	4.18	P	
Supplementary information: no fire, explosion or leakage observed			

	TABLE: 2.(2) – Vibration Test (Battery)		P
Model	OCV at Start of Test, Vdc	Results	
AS18650 3.7V 2600mAh	4.18	P	
AS18650 3.7V 2600mAh	4.19	P	
AS18650 3.7V 2600mAh	4.19	P	
AS18650 3.7V 2600mAh	4.18	P	
AS18650 3.7V 2600mAh	4.18	P	
Supplementary information: no fire, explosion or leakage observed			

	TABLE: 3.(1) – External Short Circuit Test (Precondition at lowest test temperature -5°C for cell)				P
Model	Ambient (At 55°C±5°C)	OCV at start of test, Vdc	Resistance of Circuit, Ω	Maximum Case Temperature Rise ΔT	Results
INR18650E 26	55.3	4.18	0.081	18.6	P
INR18650E 26	55.3	4.17	0.078	27.7	P
INR18650E 26	55.3	4.18	0.077	26.9	P
INR18650E 26	55.3	4.17	0.075	19.1	P
INR18650E 26	55.3	4.18	0.078	18.3	P

Tables

	TABLE: 3.(1) – External Short Circuit Test (Precondition at highest test temperature 45°C for cell)				P
Model	Ambient (At 55°C±5°C)	OCV at start of test, Vdc	Resistance of Circuit, Ω	Maximum Case Temperature Rise ΔT	Results
INR18650E 26	55.3	4.23	0.072	24.6	P
INR18650E 26	55.3	4.24	0.081	23.8	P
INR18650E 26	55.3	4.23	0.073	26.7	P
INR18650E 26	55.3	4.22	0.072	18.5	P
INR18650E 26	55.3	4.23	0.079	19.9	P
Supplementary information: no fire or explosion					

	TABLE: 3.(1) – External Short Circuit Test (Precondition at lowest test temperature -5°C for battery)				P
Model	Ambient (At 20°C±5°C)	OCV at start of test, Vdc	Resistance of Circuit, Ω	Maximum Case Temperature Rise ΔT	Results
AS18650 3.7V 2600mAh	23.4	4.17	0.081	0.5	P
AS18650 3.7V 2600mAh	23.4	4.18	0.075	0.5	P
AS18650 3.7V 2600mAh	23.4	4.17	0.073	0.3	P
AS18650 3.7V 2600mAh	23.4	4.18	0.076	0.7	P
AS18650 3.7V 2600mAh	23.4	4.18	0.081	0.6	P
	TABLE: 3.(1) – External Short Circuit Test (Precondition at highest test temperature 45°C for battery)				P
Model	Ambient (At 20°C±5°C)	OCV at start of test, Vdc	Resistance of Circuit, Ω	Maximum Case Temperature Rise ΔT	Results
AS18650 3.7V 2600mAh	23.4	4.23	0.081	0.3	P
AS18650 3.7V 2600mAh	23.4	4.24	0.079	0.2	P
AS18650 3.7V 2600mAh	23.4	4.23	0.075	0.6	P
AS18650 3.7V 2600mAh	23.4	4.22	0.077	0.7	P
AS18650 3.7V 2600mAh	23.4	4.22	0.073	0.5	P
Supplementary information: no fire or explosion					

	TABLE: 3.(7) – Overcharge Tests (Lithium Systems)	P

Tables

Model	Ambient (At 5°C±2°C or 45°C±2°C)	OCV at start of test, Vdc	Standard Charging Current, mA	Maximum Charging Voltage, Vdc	Total Time of Charging, h	Results
INR18650E 26	-5.2	3.32	1250	10	5.2	P
INR18650E 26	-5.2	3.35	1250	10	5.2	P
INR18650E 26	-5.2	3.31	1250	10	5.2	P
INR18650E 26	-5.2	3.33	1250	10	5.2	P
INR18650E 26	-5.2	3.32	1250	10	5.2	P
INR18650E 26	45.2	3.31	1250	10	5.2	P
INR18650E 26	45.2	3.31	1250	10	5.2	P
INR18650E 26	45.2	3.32	1250	10	5.2	P
INR18650E 26	45.2	3.33	1250	10	5.2	P
INR18650E 26	45.2	3.32	1250	10	5.2	P
Supplementary information: the test voltage reached 2600mAh*2.5 after the test applied for 5.2 hours. No fire or explosion.						

	TABLE: 3.(8) – Forced Discharge Test (Cell)				P
Model	Ambient (At 5°C ±2°C or 45°C±2°C)	OCV before application of reverse charge, Vdc	Measured Reverse Charge It, A	Total Time for Reversed Charge Application, Min	Results
INR18650E 26	-5.2	4.18	2.6	90	P
INR18650E 26	-5.2	4.18	2.6	90	P
INR18650E 26	-5.2	4.17	2.6	90	P
INR18650E 26	-5.2	4.17	2.6	90	P
INR18650E 26	-5.2	4.18	2.6	90	P
INR18650E 26	45.2	4.22	2.6	90	P
INR18650E 26	45.2	4.22	2.6	90	P
INR18650E 26	45.2	4.23	2.6	90	P
INR18650E 26	45.2	4.23	2.6	90	P
INR18650E 26	45.2	4.22	2.6	90	P
Supplementary information: no fire or explosion					

	TABLE: 3.(9) – Cell Protection Against a High Charging Rate Test (Lithium Systems)				P
Model	Ambient (At 5°C ±2°C or 45°C±2°C)	OCV at start of test, Vdc	Maximum Charging Current, mA	Maximum Charging Voltage, Vdc	Results
INR18650E 26	-5.2	3.31	7500	4.23	P
INR18650E 26	-5.2	3.28	7500	4.23	P
INR18650E 26	-5.2	3.33	7500	4.23	P
INR18650E 26	-5.2	3.35	7500	4.23	P

Tables

INR18650E 26	-5.2	3.31	7500	4.23	P
INR18650E 26	45.1	3.29	7500	4.23	P
INR18650E 26	45.1	3.31	7500	4.23	P
INR18650E 26	45.1	3.30	7500	4.23	P
INR18650E 26	45.1	3.29	7500	4.23	P
INR18650E 26	45.1	3.31	7500	4.23	P
Supplementary information: no fire or explosion					

	TABLE: 3.(10) – Forced internal short circuit of cells			P
Model	Ambient (At 5°C ±2°C or 45°C±2°C)	OCV at start of test, Vdc	Test was terminated for a voltage drop of 50mV or a pressure of reaching 400N	Results
INR18650E	-5.2	4.19	Pressure: 800N, voltage drop: 3mV	P
INR18650E	-5.2	4.19	Pressure: 800N, voltage drop: 4mV	P
INR18650E	-5.2	4.18	Pressure: 400N, voltage drop: 4mV	P
INR18650E	-5.2	4.19	Pressure: 800N, voltage drop: 3mV	P
INR18650E	-5.2	4.18	Pressure: 800N, voltage drop: 2mV	P
INR18650E	45.2	4.22	Pressure: 800N, voltage drop: 2mV	P
INR18650E	45.2	4.23	Pressure: 800N, voltage drop: 3mV	P
INR18650E	45.2	4.23	Pressure: 800N, voltage drop: 2mV	P
INR18650E	45.2	4.23	Pressure: 800N, voltage drop: 2mV	P
INR18650E	45.2	4.22	Pressure: 800N, voltage drop: 3mV	P
Supplementary information: no fire or explosion				

Photos

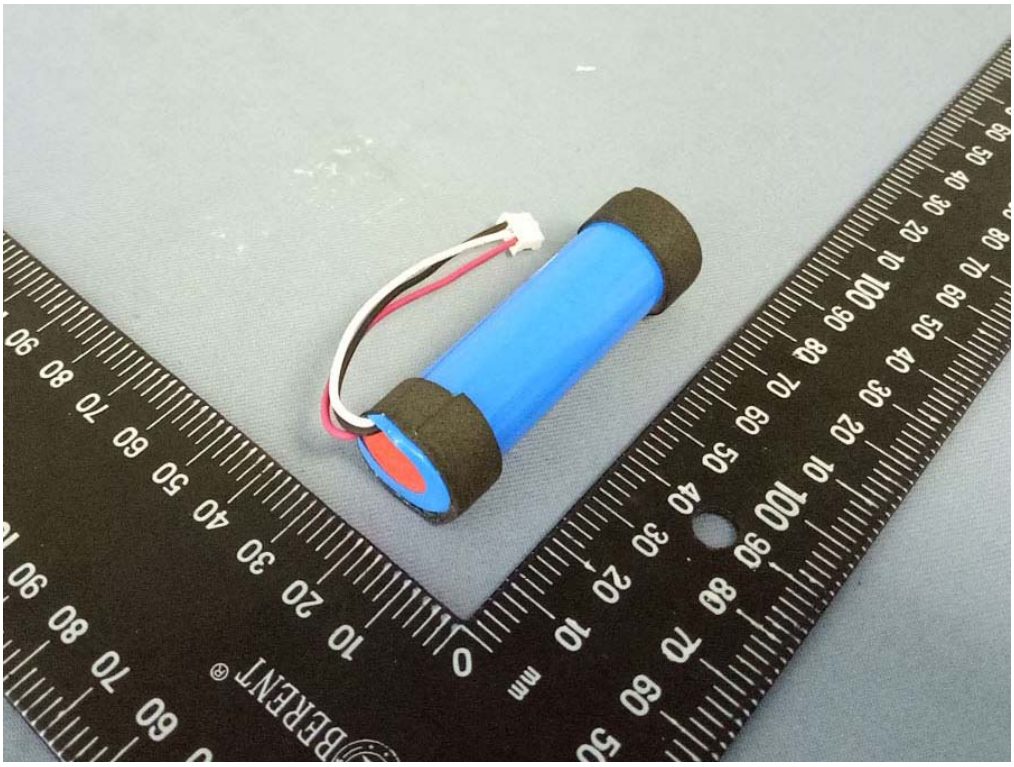

Fig.1 General view 1 of battery

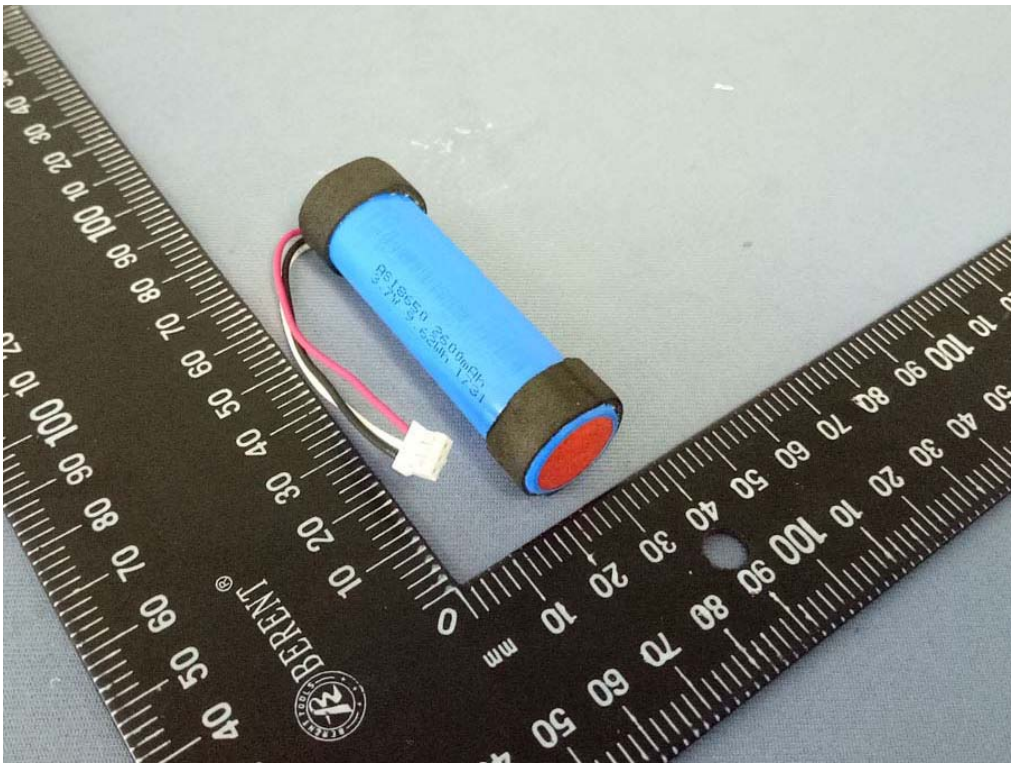

Fig.2 General view 2 of battery

Photos

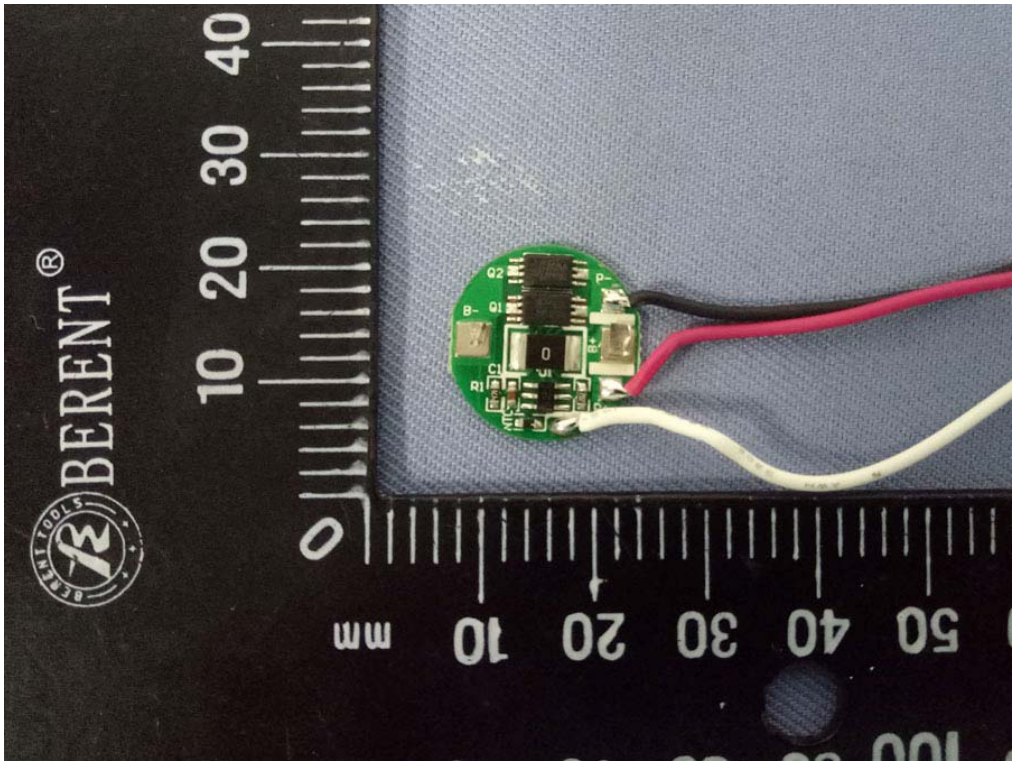

Fig.3 PCB board view 1

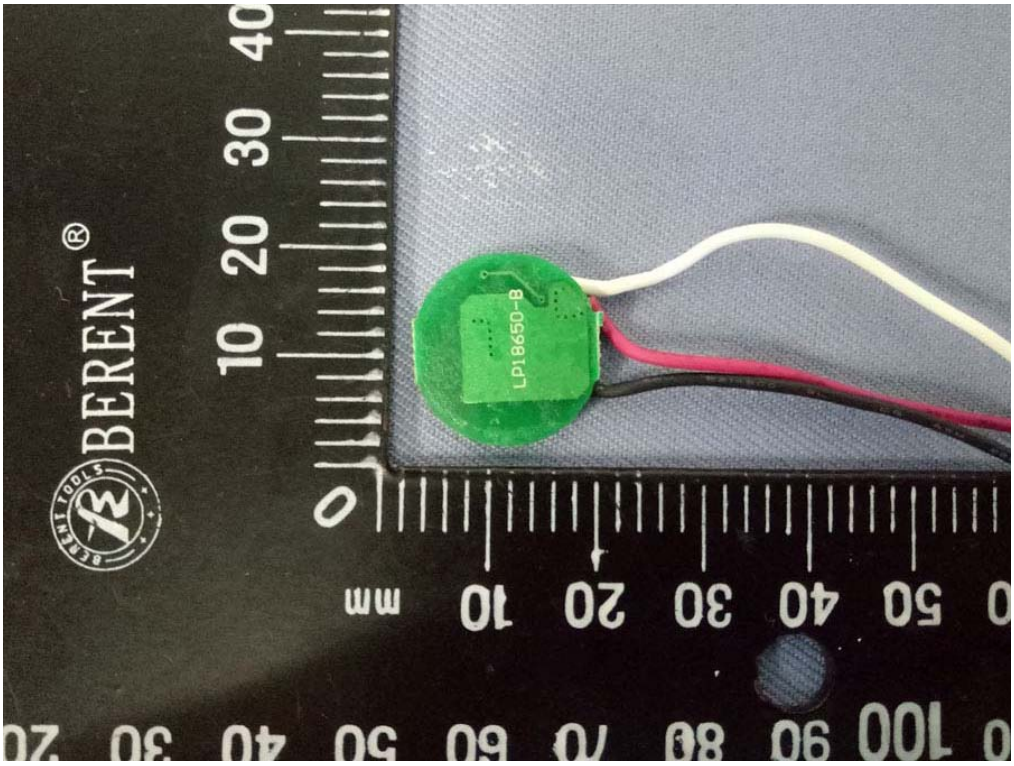

Fig.4 PCB board view 2

Photos

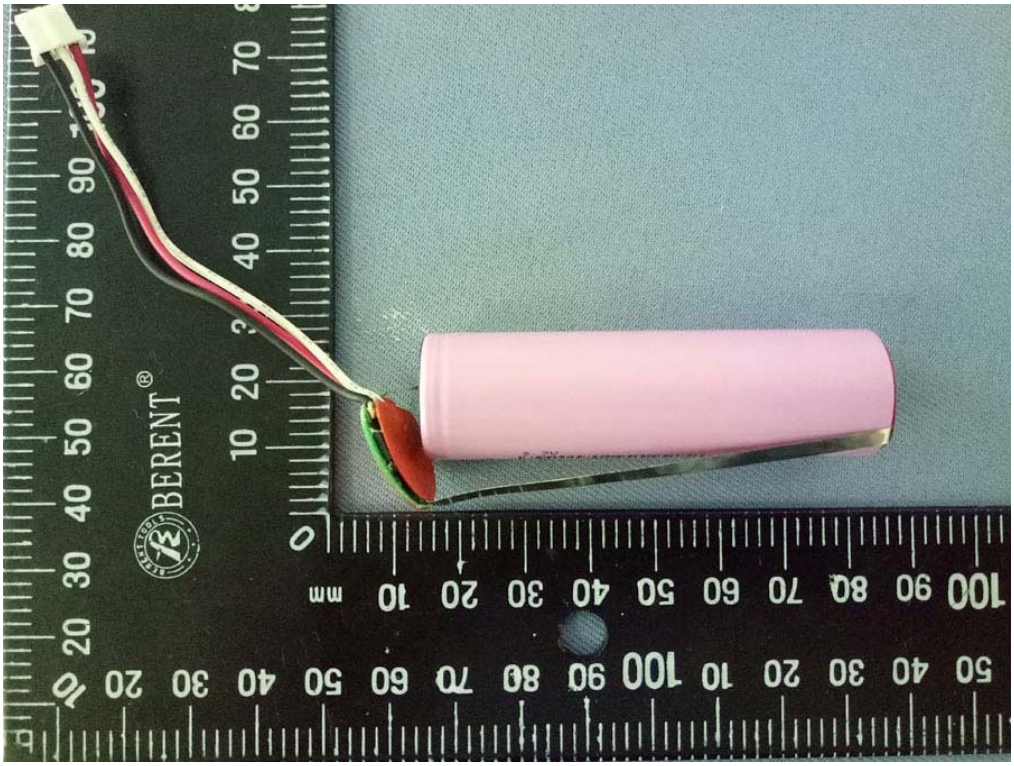

Fig.5 Inside view of battery

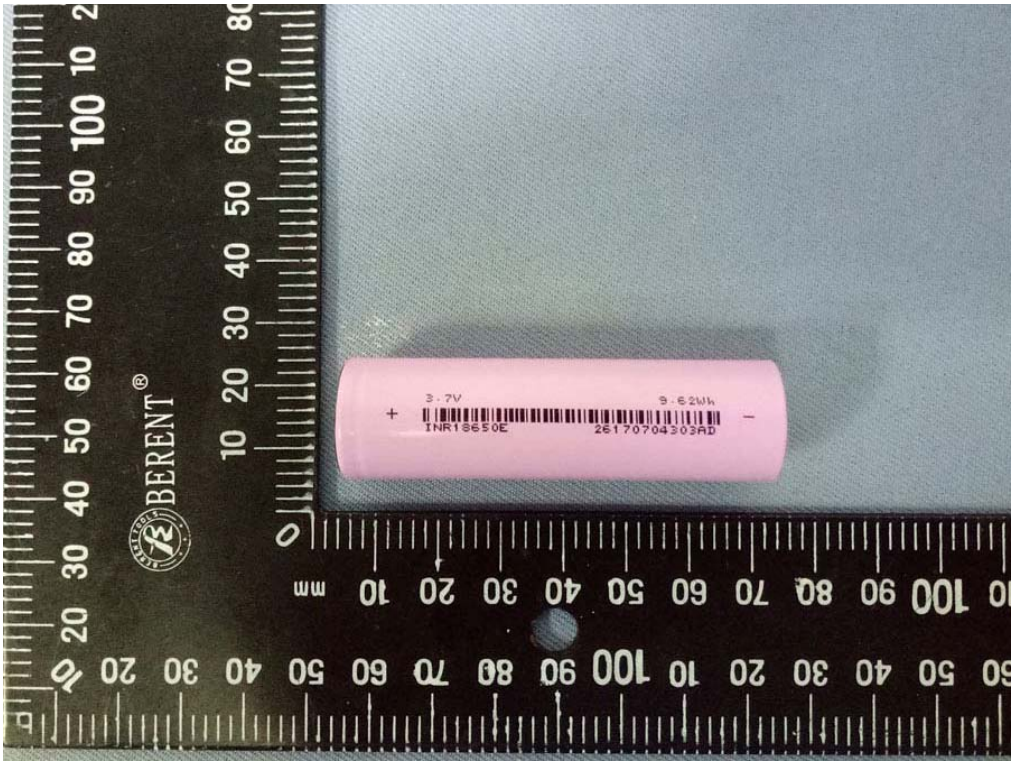

Fig.6 Overall view of cell